HÄFELE POST HINGE

Photo shown with add on soft close 312.07.711 fitted, see page 327

- Opening angle 90º
- Drilling diameter for hinge cup: 35 mm
- Drilling depth 11.5 mm
- Hinge on plate mounting system
- Standard drilling for hinge and mounting plate
- Hinge integrated adjustment
- Order fixing screws separately
- Order qty: 1 pc

Drilling pattern for cup fixing

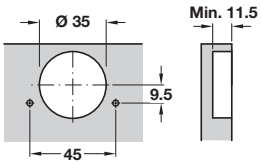

Häfele Post and Pie-Cut hinge

Minimum gap for doors with chamfered edges (r = 1 mm) with factory setting

Door thickness mm	Distance to cup E mm		
	3.0	4.0	5.0
16	0.3	0.3	0.3
17	0.5	0.5	0.5
18	0.7	0.7	0.7
19	1.0	0.9	0.9
20	1.3	1.2	1.2
21	1.7	1.6	1.5
22	2.5	2.1	2.0
	Minimum gap F		

Soft close clip on fitting for sprung hinges shown on page **327**

Häfele Post hinge

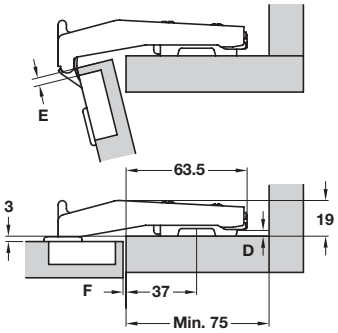

Drawings show application on D = 0 mm thick mounting plate

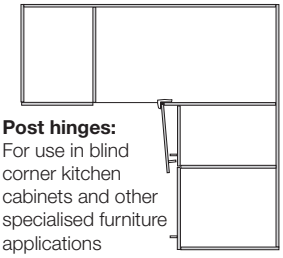

Post hinges:
For use in blind corner kitchen cabinets and other specialised furniture applications

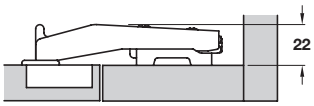

Drawings show application on D = 3 mm thick mounting plate

> Click on post hinge, mounting plates must be orderred separately, shown below

90º

FIXINGS REQUIRED HOSPA Ø 3.5

Fixing	Click on
Screw fixing	312.28.500

YOU ALSO NEED:

MOUNTING PLATES Page 326 and below

FIXING SCREWS Page 468

OPTIONAL ACCESSORIES Pages 328, 403-417

Click on mounting plate

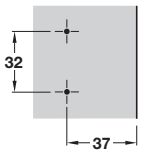

Height F = mounting plate height shown in tables

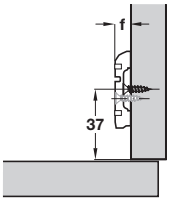

- Hospa screw fixing or with pre-mounted Euro screws
- One part plate with ± 2 mm height adjustment
- Nickel-plated steel
- Order qty: 1 pc

Height f	Hospa screw
0 mm	312.30.540

DRAWER SYSTEMS, STAYS AND HINGES 2015, © Häfele U.K. Ltd 2015. Dimensional data not binding. We reserve the right to alter specifications without notice.