Pivot hinge, without stop

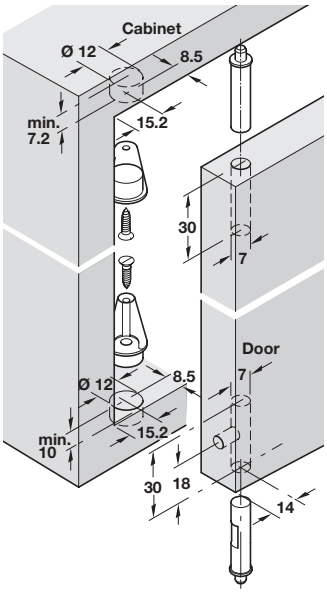

- For flush mounted doors
- Detachable
- For door thicknesses from 12 to 21 mm
- Press fit
- Max door opening angle 140°
- One pair per mounting
- Plastic
- Order fixing screws separately
- Order qty: Multiples of 10 pairs

140° FIXINGS REQUIRED HOSPA Ø 2.5

Finish	White	Brown	Black
Cat. No.	361.22.710	361.22.110	361.22.310

Pivot hinge for writing bureau

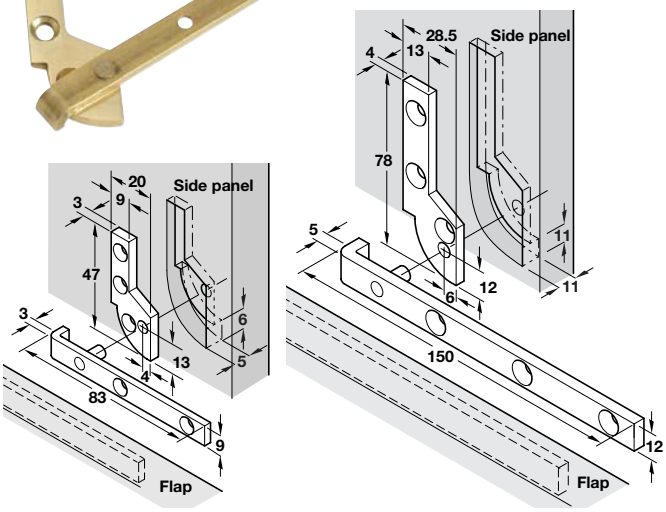

- Drop leaf mounting
- Smooth drawn
- Screw fixing
- Max. door opening angle 90°
- One pair per mounting
- Polished brass
- Order fixing screws separately
- Order qty: 1 pair

90° FIXINGS REQUIRED HOSPA Ø 3.5

Length	80 mm	150 mm
Cat. No.	361.50.802	361.50.820

Corner pivot hinge, without stop

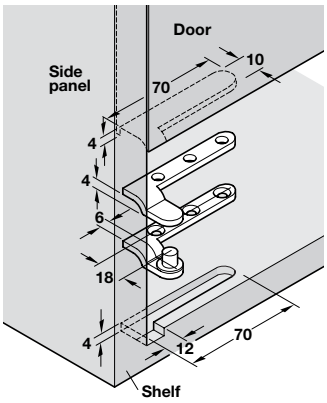

- Cranked outer knuckle
- Screw fixing
- Max. door opening angle 180°
- Max. load bearing capacity 20 kg
- One pair required per mounting
- Matt brass
- Order fixing screws separately
- Order qty: 1 pair

180° FIXINGS REQUIRED HOSPA Ø 3.5

Length	70 mm
Cat. No.	362.01.500

Corner pivot hinge, without stop

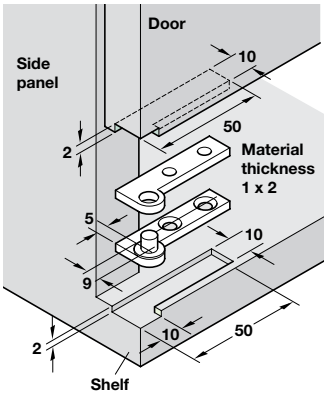

- Straight outer knuckle
- Screw fixing
- Max. door opening angle 250°
- Max. load bearing capacity 20 kg
- One pair required per mounting
- Polished brass with steel pin
- Order fixing screws separately
- Order qty: 1 pair

250° FIXINGS REQUIRED HOSPA Ø 2.5

Length	50 mm
Cat. No.	362.10.803

TCH TECHNOLOGY 2018, © Häfele U.K. Ltd 2018. Dimensional data not binding. We reserve the right to alter specifications without notice.