Foot operated door holder

- To operate, depress upper lever
- To release, depress lower lever
- Max. throw 55 mm
- Rubber foot
- Mild steel or stainless steel
- Order qty: 1 pc

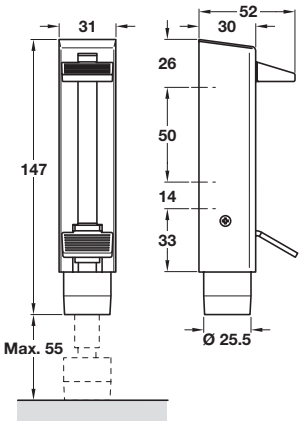

Fixings included ✔

Finish	Cat. No.
Silver	938.00.101
Satin stainless steel	938.00.100

Foot operated door holder

- To operate, depress upper lever
- To release, depress lower lever
- Max. door weight 40 kg
- Max. throw 50 mm
- Rubber foot
- Mild steel or stainless steel
- Order qty: 1 pc

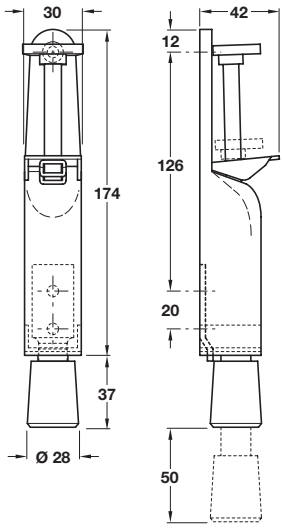

Fixings included ✔

Finish	Cat. No.
Silver	938.02.001
Satin stainless steel	938.02.000

TCH AH 2019. © Häfele U.K. Ltd 2019. Dimensional data not binding. We reserve the right to alter specifications without notice.